3-Pin，M12 Extension Cable , Male-Female

ZZAK3-2-ZAS3/PUR

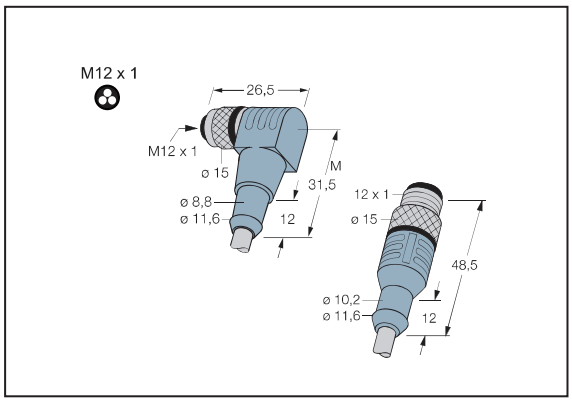

- Male，3-pin，Straight
- Female，3-pin，Angle
- Protection class：IP67
- Cable material：PUR
- Cable length：2m

Technical parameter

Electrical parameter

Rated voltage	10...30VDC	
Rated current	4A	
Insulation resistance	≥10^9Ω	
Noise impedance	≤5mΩ	
Ambient temperature range	Connector[˚C]	-30...90˚C
	Cable[˚C]	-40...80˚C
Core cross-section	0.25（32x0.1）mm^2	
Cable diameter	5.25mm	
Cable color	Gray	
Contacts	Metal, CuZn, Gold-plated	
Type of protection	IP67, (screwed together)	
Connector body	Plastic,TPU	
Seal	Viton（FPM）	
Mechanical lifespan	> 100 Mating cycles	

Wiring diagram

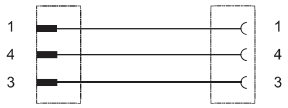

M12 Circuit Diagram

Color	Female
BN	1
BK	4
BU	3

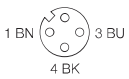

M12 Female

M12 Male